Because each individual is different, osseointegration surgeries can be modified to suit each individuals' needs, therefore it is very important to consult with your doctor and prosthetist before following any of the steps below. These general guidelines should help you prevent infections, maintain your residual limb, prepare for weight-bearing and ultimately regain your mobility.

What is Osseointegration?

Osseointegration is the scientific term for bone ingrowth into a metal implant. An artificial implant is permanently, surgically anchored and integrated into bone, which then grows into the implant. Although osseointegration is most commonly used in dental implants and joint replacement surgery. It has been very successful in these uses for decades.

This is a revolutionary procedure for amputees who haven't adapt well to traditional sockets. Suspension and vacuum issues, pain, discomfort, sores and alignment problems can be the difference between a life of free mobility and one of frustration and stagnation.

In short, osseointegration can allow amputees to wear a prosthetic for longer periods of time with greater comfort and better proprioperception than a typical socket prosthesis, which in turn provides better quality of life!

The OPRA System

The OPRA™ Implant System is an innovative method allowing the direct connection of an artificial limb to the skeleton. The prosthesis is firmly attached through a quick connection, which lets your prosthesis become a true extension of your body and mind, controlled by you.

Principal of Operation

OPRA consists of an anchorage element (Fixture) and a skin-penetrating device (Abutment). The Fixture is surgically inserted in the medullary canal of the remaining femoral skeleton and, after a healing time of six months, the Abutment is connected to the Fixture. The amputation prosthesis is then attached directly to the external part of the Abutment, via the OPRA Axor.

What is the Axor

The OPRA Axor II (Axor for short) is designed to be used as part of the OPRA Implant System and has two functions:

- Protect the system from excessive loads via a release mechanism in both bending and rotation.
- Provide a standard connection to other prosthetic components that would include the prosthetic knee and foot.

The Axor is designed to be used for normal everyday activities.

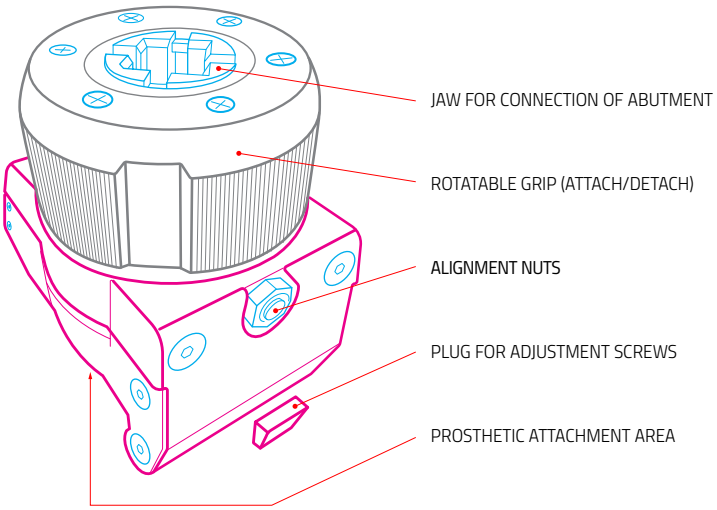

SURGERY STAGES

Once your particular case has been assessed, and you have been qualified for the treatment, pre-operative surgical procedures will start. The OPRA Implant System consists of seven titanium or titanium-alloy parts that are implanted during two surgeries.

In the first surgery **(Stage 1)**, the *fixture* is implanted in the bone. Healing time for this surgery is about 6 months. During this time, the bone grows onto the fixture to anchor it. Your hospital stay will last 1 to 3 days, physical therapy is not needed and immobilization is preferred in order to optimize healing.

After the healing is complete, the *abutment* is attached to the fixture during the second surgery **(Stage 2)**. The abutment extends outside the skin to attach to the prosthetic. Generally after about three weeks patients can start active movement training without load. The postoperative rehabilitation is standardized with controlled levels of loading. Full weight bearing with definitive prosthesis is normally permitted approximately 6 months after Stage 2.

Recommended follow-ups comprise clinical, mechanical and X-ray checks-ups.

Implant components for the Stage 1 surgery:

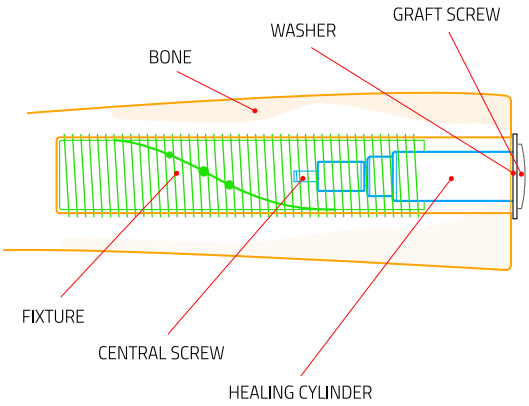

Implant components for the Stage 2 surgery:

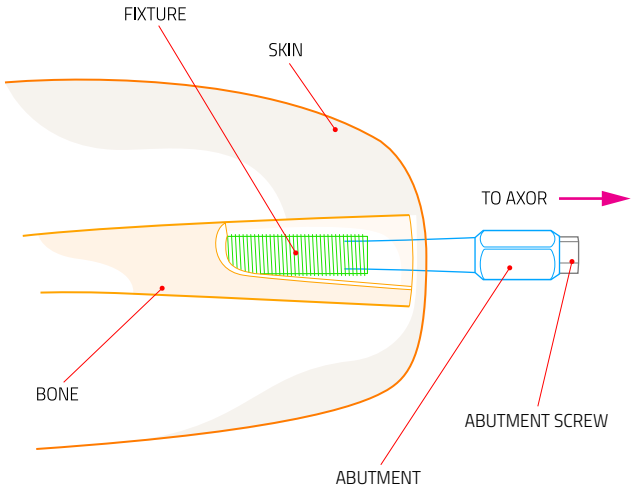

MOBILIZATION AND TRAINING PROGRAM

Mobilization is carried out under the supervision of a physiotherapist in accordance with general principles for treatment of osseoanchored implants. Initial loading is carried out with a short training prosthesis, followed by training with a full-length prosthesis according to the training program.

Precaution

For at least 6 months after Stage 1 surgery, the Fixture must not be subjected to direct load. Full load with definitive prosthesis is normally permitted approximately 6 months post-operatively Stage 2 following check-up by the physician responsible for the treatment.

TREATMENT PROTOCOL TIMELINE OVERVIEW *- May vary from patient to patient*

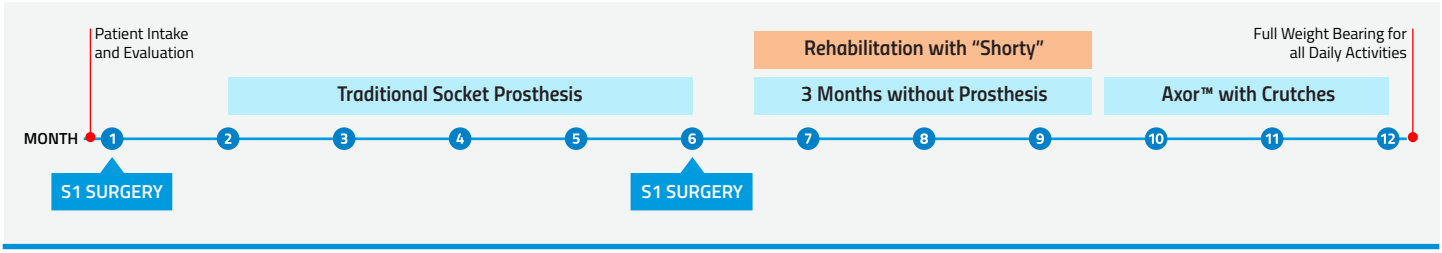

WEIGHT BEARING SCHEDULE

With Training Prosthesis

Week 1-2 post-op Stage 2 (S2) - Stay immobilized.
Week 3 post-op Stage 2 (S2) - Active movement training of the hip joint without load.

POST-STAGE 2 REHABILITATION AND TRAINING

Week 6 post-op Stage 2

- Initiate loading with short training prosthesis that only reach to the knee joint
- Initial a load of maximum 40 Lbs
- Avoid rotations. Increase approximately 20 Lbs per week until full bodyweight is reached.
- Exercise 2x15 minutes per day, increasing to 2x30 minutes/day.
- If pain occurs (above 5 on 0-10 scale) the patient should abstain from all training for 1-2 days or until pain has decreased to a more pain-free level.
- Return to training using a decreased load. If pain remains above 5 contact the treating physician.

Week 10-14 post-op Stage 2

- General fitness exercises including kneeling in all four and kneeling down
- Return to the treating physician, decision on full-length prosthesis
- Start training with full length prosthesis (max 40 Lbs)
- Increase 20 Lbs per week
- Use the prosthesis max 2x60 minutes daily indoors

Week 12-18 post-op Stage 2

- Training of balance and gait pattern
- Always 2 crutches. Use of stairs
- Sitting down and sitting down to standing up
- Week 14 prostheses might be used the entire day
- Walking up-hill with two supports

Week 16-26 post-op Stage 2

- Always use 2 crutches for longer walks outdoors
- Walking slightly uphill, rough terrain, obstacles and turning
- Fitness training with full-length prostheses
- Return to the treating physician for a decision about the use of one support more frequently while walking

If full body weight is reached and training conducted without pain:

Walking without support during training. Return to the treating physician for a decision about the use of one support more frequently while walking.

→ WHEN TO CONTACT YOUR DOCTOR

For your safety and comfort, and for the anchoring and prosthesis to function without problem, it is important to follow certain instructions and advice as followed.

- Sudden pain in your leg during or after weight bearing

Signs of infection which include but are not limited to:

- The area where the abutment device extends out of the skin becomes red or irritated
- Increasing amount of body fluid leaks from the area where the abutment device extends out of the skin or there is a bad smell coming from that area
- Dark discoloration increases in the area where the abutment device extends out of the skin
- You notice any change in the way the Axor or prosthesis connection feels
- If the Axor has released for bending during ordinary daily activities
- If the Axor has been submerged in water
- The Axor must be visually inspected and checked by the prosthetist annually for signs of damage, wear and fatigue. The release levels should be checked and recorded by the prosthetist annually.

→ WHEN TO CONTACT YOUR PROSTHETIST

- If you are unable to achieve a stable connection between the failsafe and abutment
- You notice any change in the way the device-to-prosthesis connection feels
- Your Failsafe Device releases
- You see noticeable wear/deformation or damage of any component
- If it is time for your failsafe to be serviced.

→ CHECK UPS WITH YOUR PROSTHETIST

After Stage 2 the following check-ups are recommended:

Action	Day 21	Month 3	Month 6	Month 12	Continue
Amputation Status	✓	✓	✓	✓	Every 6 months
Components Inspection	✓	✓	✓	✓	Every 6 months
X-Ray			✓	✓	Years 2, 3, 5, 7, 10, 15, etc

HYGIENE

Instructions for cleaning the area where the Abutment device extends out of the skin

- Moisten a clean gauze bandage or a compress with sterile saline solution (.9% salt). Wrap the bandage or compress around the device, press it gently against the skin and clean the skin with a circular movement (as with dental floss.) Repeat this cleaning twice daily, e.g. morning and evening.
- If there is dry, flaking skin immediately around the device this may be removed using a dry swab or a swab moistened with sterile saline solution (.9% salt).
- If the skin area next to the device becomes dry and chapped, apply a thin layer of an ointment, e.g. Vaseline Petroleum Jelly, twice a day.
- It is not unusual for a small amount of clear fluid to seep form the area where the device extends out of the skin, especially after vigorous physical activity. If a small amount of clear fluid leaks out, wrap a clean gauze bandage or compress around the Abutment and change it daily.
- For bathing or swimming, Vaseline Petroleum Jelly should be gently applied to the area where the device extends out of the skin and a silicon liner (provided by your prosthetist) should be used as a "bathing cap". It is very important to. Clean the area where the device extends out of the skin carefully after bathing or swimming.

In case or irritation or infection

- If you have a cold, the area where the device extends out of the skin may become irritated. Prior to cleaning this area, it is important for you to carefully clean your hands with alcohol-based rub.
- At early signs of irritation or infection such as redness, or mild pain, you must clean the area where the device extends out of the skin one or more times extra during the day.
- If irritation continues along with flushing, swelling, fever and/or aching, or non-clear fluid draining from the area where the device extends out of the skin, you should consult your treating physician.
- **In case of high fever and/or severe pain, you should immediately go to the hospital emergency room.**

AXOR CLEANING AND HYGIENE INSTRUCTIONS

The Axor should be cleaned on a regular basis, at least once per week and after any contact with body fluids. Cleaning should be carried out according to the following procedure:

1. Pour alcohol-based disinfectant into the space between the jaws for connection to the abutment until it is filled with alcohol.
2. Let it rest for a few minutes and rotate the grip back and forth several times.
3. Empty the Axor and pour some alcohol-based disinfectant in the square hole.
4. Clean the Axor on the outside using a soft brush. Put extra attention to screws and nuts.
5. Wipe off the Axor on the outside using alcohol-based disinfectant.

- **Caution!** Not cleaning the Axor can cause the Axor to fall off or damage the release function.
- **Caution!** If the device is not clean, the risk for infection is increased.

Body fluids from the skin penetration area should not reach the Axor. A protective tissue tied around the abutment could preferably be used.